REV	LTR	ECN NO	DESCRIPTION	DATE	APPROVED
			RELEASE	2013/04/11	蒋佳平

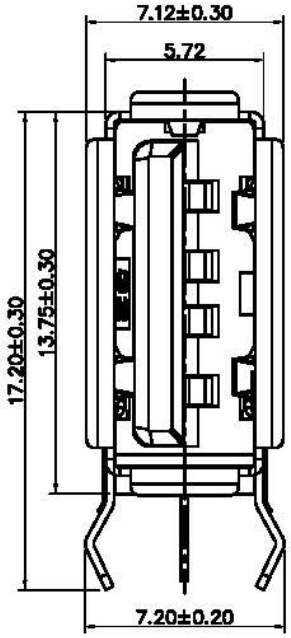

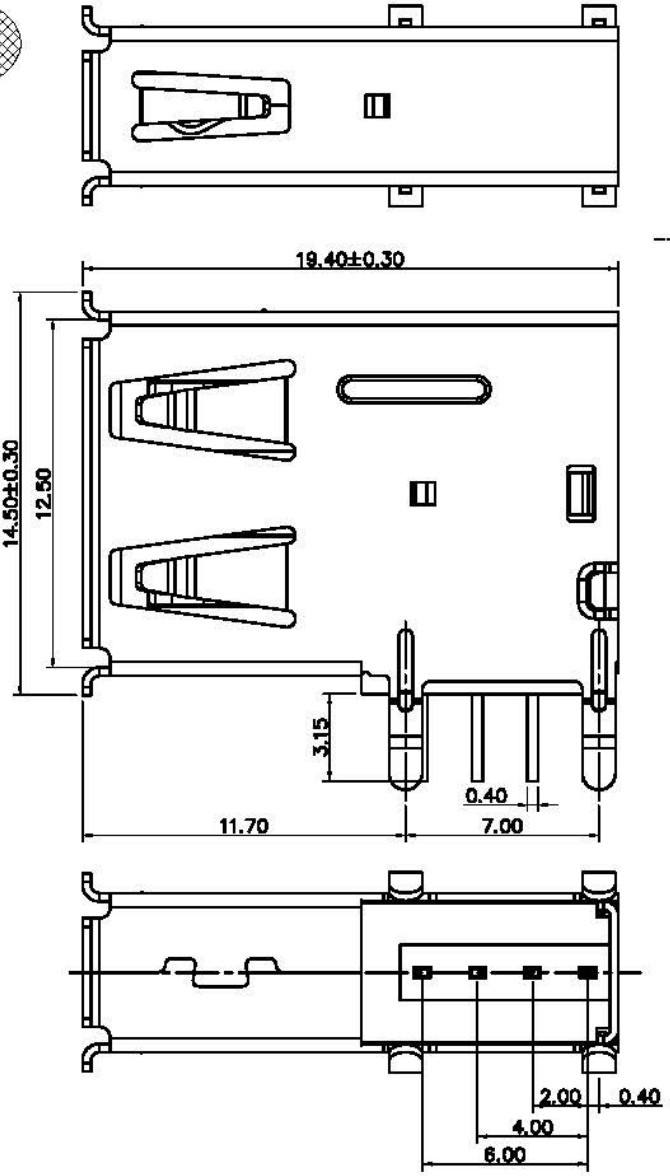

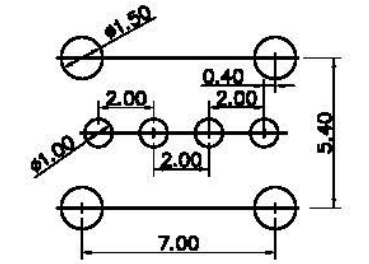

Recommended PCB Layout

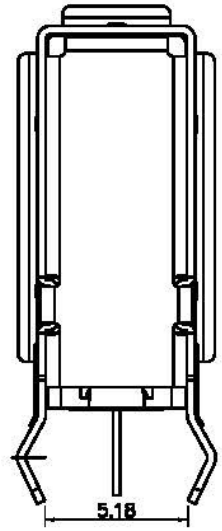

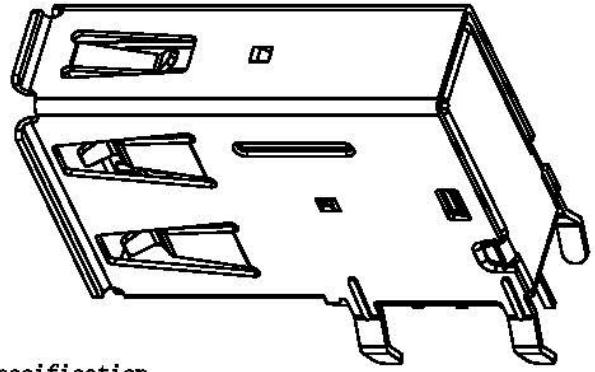

Specification

*Electrical Characteristics:

Contact Current Rating:1 Amperes.

Dielectric Withstanding Voltage:AC 500V R.M.S.

Insulation Resistance:500MΩ Min.

Contact Resistance:30mΩ Max.

*Environmental:

Operating Temperature:-40¡ãC～+60¡ãC.

*Mechanical Characteristics:

Mating Force:3.57kg Max.

Unmating Force:1.02kg Min.

*Material:

Housing:PBT UL 94V-0/2

Contact:BRASS C2680

(t=0.20mm).Plating Aulu;"3u;"5u;"10u;"

15u;"30u"

Shell:BRASS/SPCC(t=0.30mm).plating NI over all

KUK JE TELE PARTS CO., LTD

DRAWN: MIKE	TOLERANCES		TITLE: USB A TYPE 4PIN	
CHECK: JACK	.X ±0.30 .XX ±0.20 .XXX ±0.10 ANGLES ±3.00°	UNIT: M M SCALE: 1:1	PART NO: KJCAF203-C3113-J	REV: A/0
APPROVED: SPRING	DATE: 2013/06/11	SIZE: A4	DRAWING NO: AF-203-C	SHEET: 1/1